Fig. 3

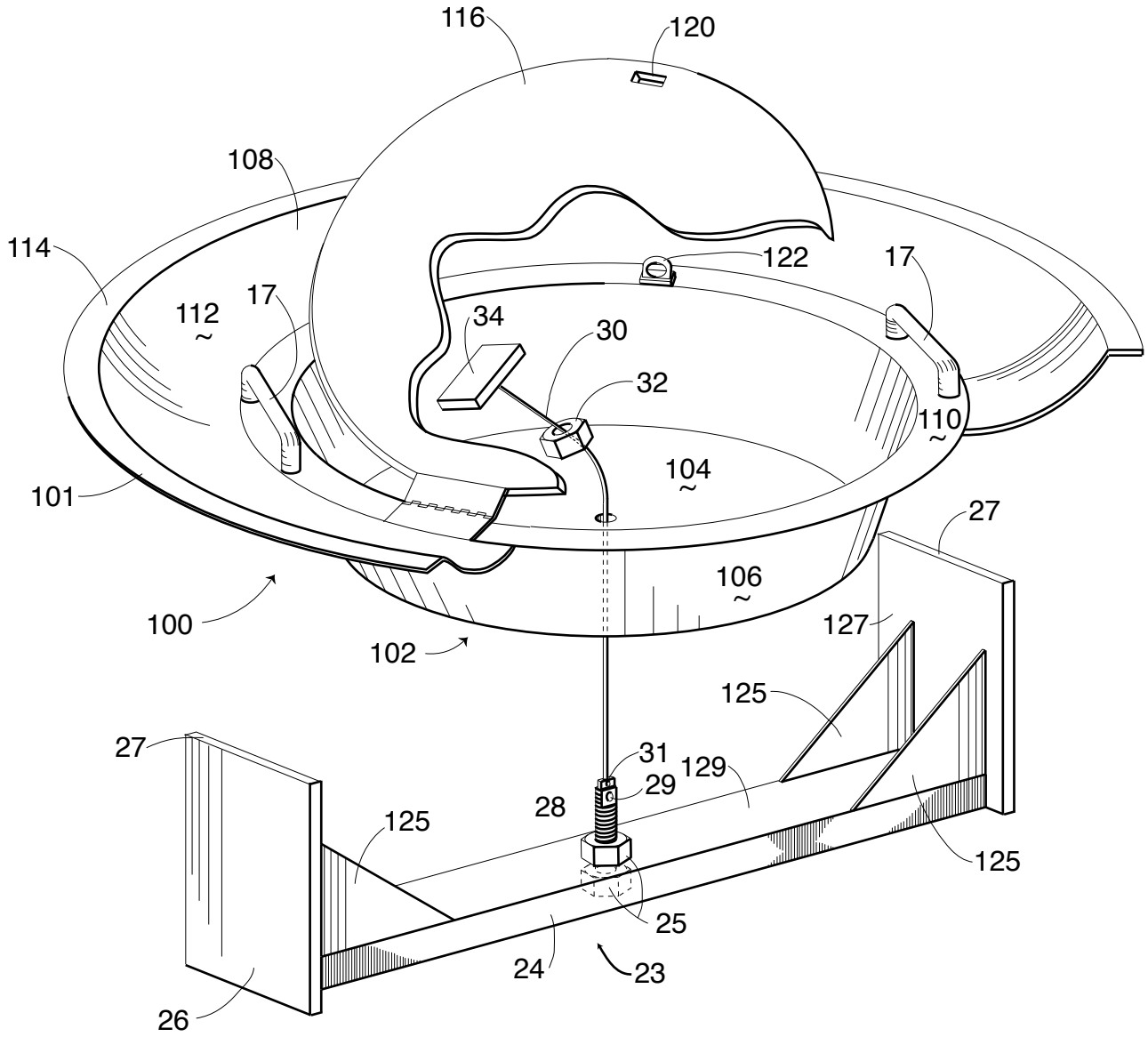

series1studio.com 919.969.8059